FONTANA WELLA GOOSE NECK COMMERCIAL AUTOMATIC SENSOR FAUCET IN CHROME SPECS

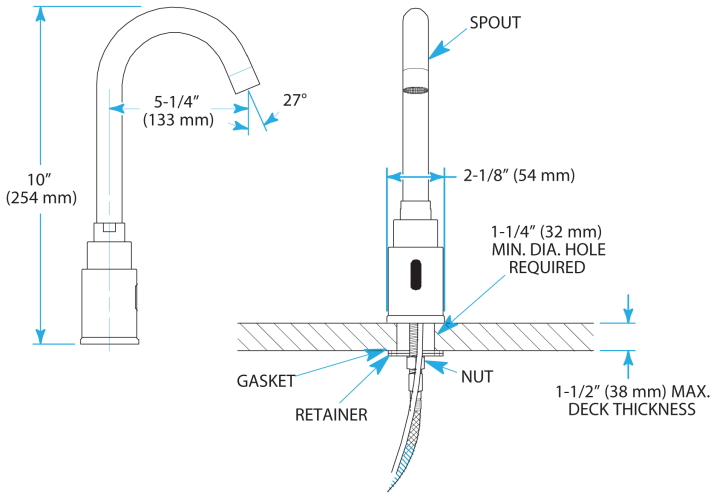

SPECS :
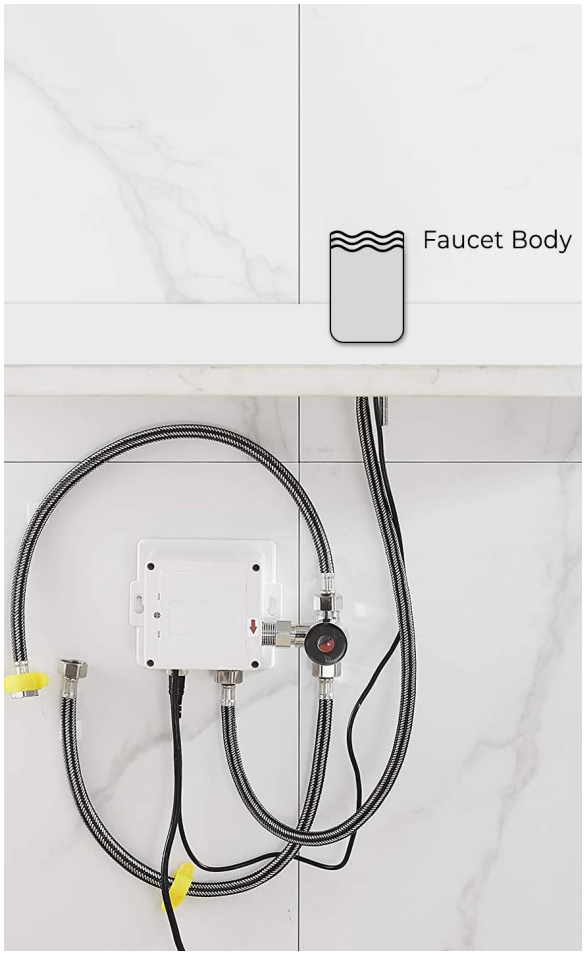
Power: DC:6V(4AA alkaline battery)
AC:220V-240V; 50/60HZ
Water pressure: 0.05 - 0.8 Mpa
Detection Zone: 30 cm or adjustable
Motor valve lifespan: up to 500000 flushes
Battery lifespan: 100000 cycles
Static Power Consumption: 0.36mw
Working Power consumption: 0.5mw
Inductive Opening Time: < 1 second
Inductive Closing Time: < 2 second
Dia.of inlet / outlet pipe: G1/2"
Flux: ≥0.07L/S
Temperature: 0.1-50°/C
Dia of installing faucet: 33~35mm