BRUSHED GOLD THERMOSTATIC REMOTE CONTROLLED LED MUSICAL RECESSED CEILING MOUNT RAINFALL MIST WATERFALL SHOWER SYSTEM WITH JETTED BODY SPRAYS AND HAND SHOWER INSTALLATION INSTRUCTIONS

PRIOR TO INSTALLATION

Please read installation instructions below. All plumbing should be installed in accordance with applicable building codes and regulations.

Unpack and inspect the items for any shipping damages. If you find damages, do not install.

All products must be installed by a professional and certified plumber otherwise warranty may be voided.

POSSIBLE TOOLS REQUIRED*

Plumbers Tape

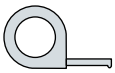
Tape Measure

Level

Adjustable Wrench

Hex Wrench

Thread Sealant

Drill

Pencil or Marker

Screwdriver

*not included

Shower Head Installations Instruction

Step 1:

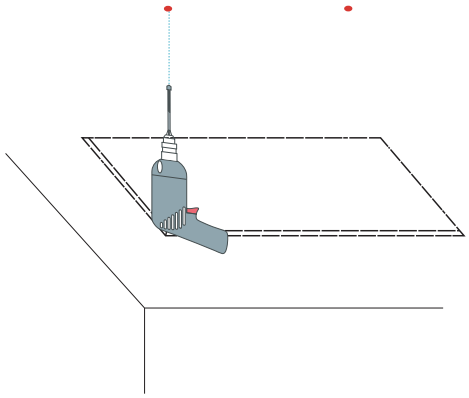

Step 2:

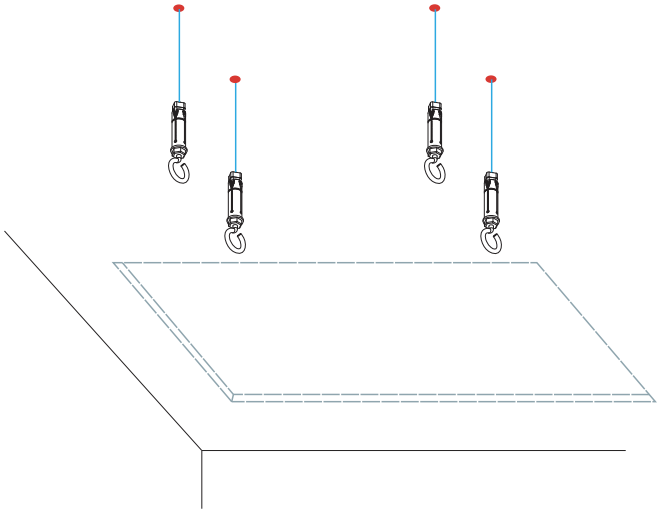

Step 3:

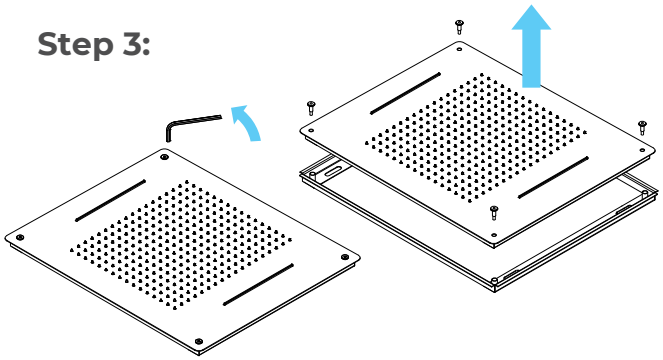

Step 4:

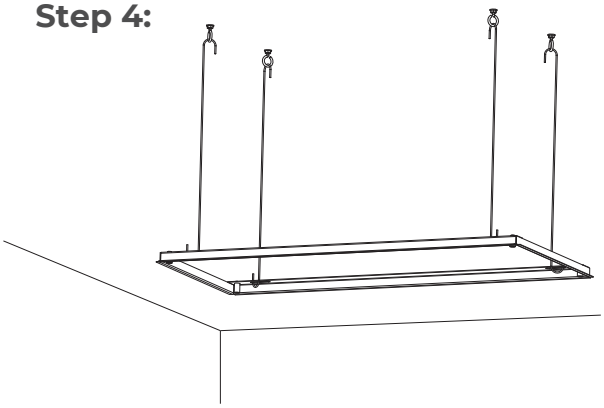

Step 5:

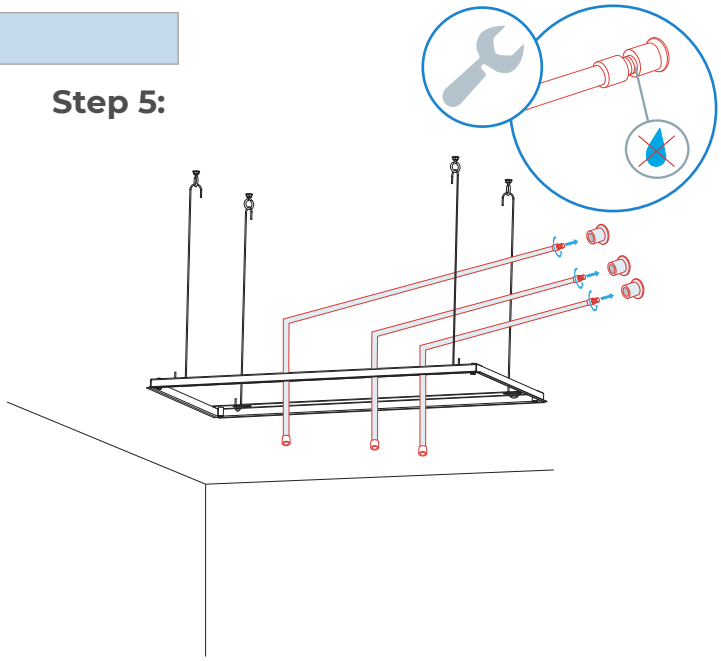

Step 6:

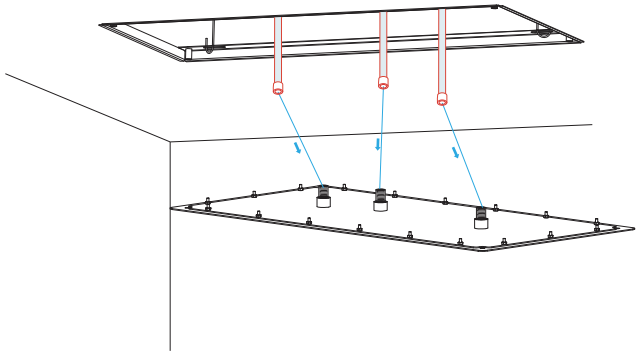

Step 7:

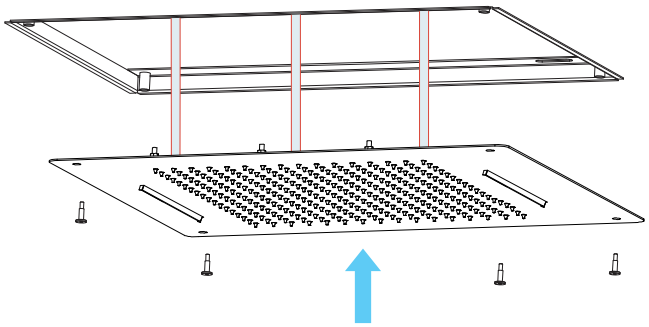

Step 8:

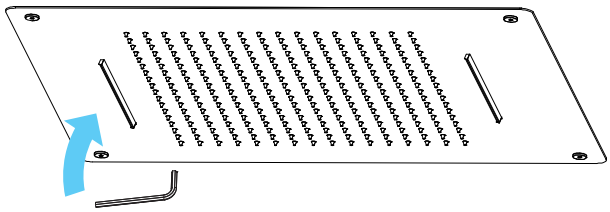

Hand Shower Installations Instruction

Step 1:

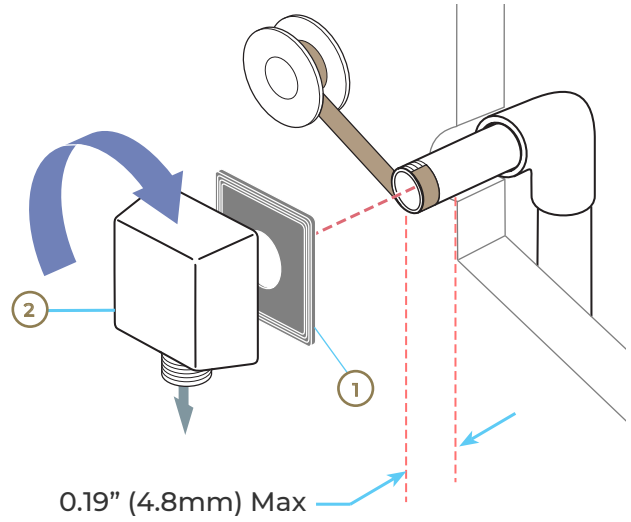

Step 2:

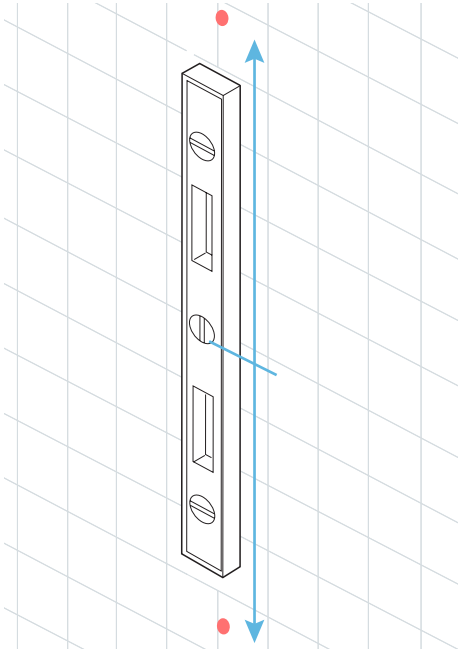

1. SUPPLY ELBOW INSTALLATION

Apply plumber tape to threaded ends of 1/2" (13 mm) iron pipe nipple (not supplied) and thread into shower riser elbow so that nipple extends past the finished wall no more than 0.19" (4.8 mm) and no less than 1/16" (1.6 mm). Place the supplied installation gasket (1) behind the elbow (2). Screw the supply elbow onto the nipple making sure that the supply elbow outlet is in a downward facing position. Minimum diameter for hole is 1" (25 mm) with a maximum of 1 1/2" (38 mm).

CAUTION: To avoid damage to the supply elbow or hose finish during installation, wrap with a cloth or tape and use only a smooth-jawed wrench.

DO NOT OVERTIGHTEN CONNECTIONS.

2. Mark the place for drilling the hole for the lower post. Mark using a level, in a vertical line from the lower hole, the placement of the upper post hole. Distance approximately 25.7" (653 mm).

Step 3:

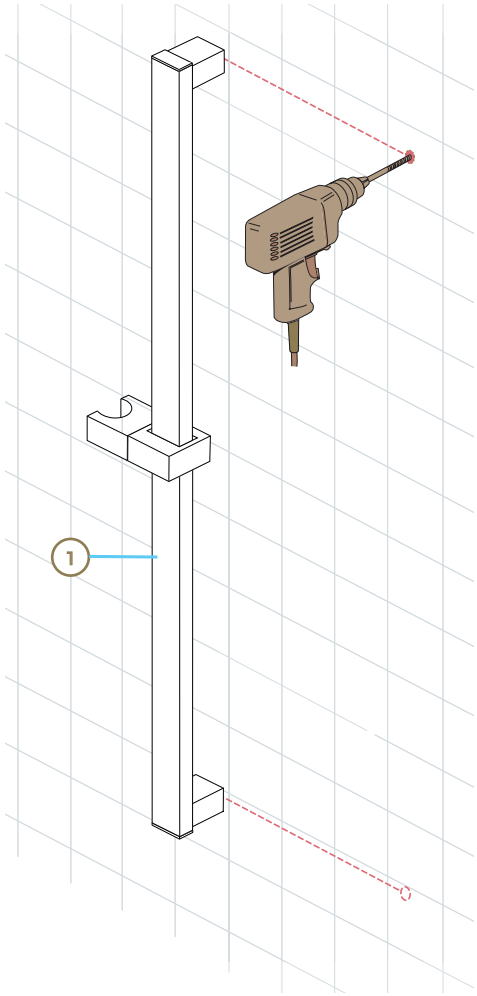

3. WALL BAR INSTALLATION

Note: Hole size will be determined by your use of just the screw or anchor and screw for installation. Drill hole for mounting of bottom post. Start with a smaller drill bit size, 1/8" is recommended, and drill hole. If you hit a wall stud, go to next step. If you do not hit a wall stud, change to a drill bit size suitable for the anchors, 1/4" is recommended, and re-drill hole.

Anchors are for use on drywall or tile. For fiberglass, acrylic and flat plastic surfaces, use toggle bolts (not included).

Before drilling top mounting hole, it is recommended that you place the assembled slide bar and post assembly (1) on its side next to the hole locations you have marked. Make sure posts are pressed fully onto bar. Align center of bottom post with bottom hole that was just drilled and make sure center of top post aligns with mark for top hole. If not, re-mark top hole location. If it aligns, drill top hole in location as marked.

Step 4:

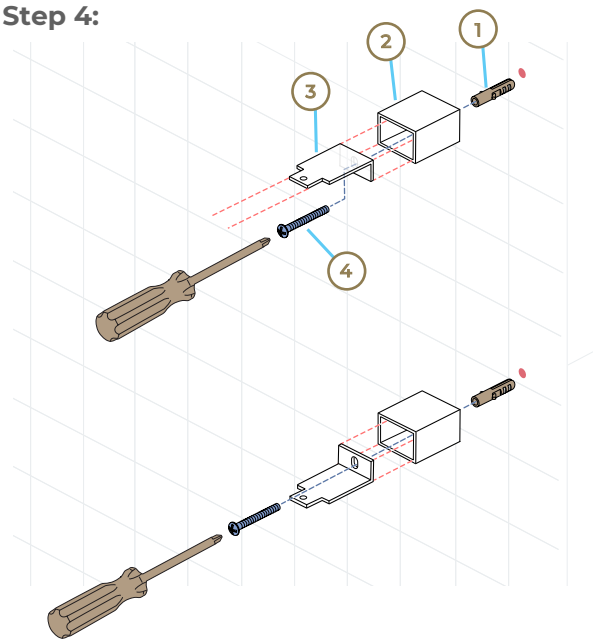

4. Insert anchors (1) into drilled holes. Slide covers (2) over brackets (3), and insert screws (4) into bracket/cover assembly. Secure assembly to wall with screws.

5. Slide the slide mechanism (1) and elbow (2) onto the wall bar (3). Slide wall bar over bracket tabs (4) and secure the wall bar unit with screws (5) provided. Install caps (6) into ends of wallbar. Lower elbow (7) & screw (8) was pre-installed prior to shipping, tighten screw (9) if you find it is sliding inside bar.

6. INSTALLATION OF THE SHOWER SET

Connect the shower hose to the wall outlet (1) and the hand held piece (2), ensuring that the internal gaskets (3) are present in the shower hose nuts. Normal 1/2" rubber gaskets can be used.

Place the conical nut of the hose (4) that is connected to the hand held piece, in the slide bar holder (5) and turn it to desired position.

To slide the mechanism up or down, push in on the button (6) of the mechanism and slide it on the bar.

Step 5:

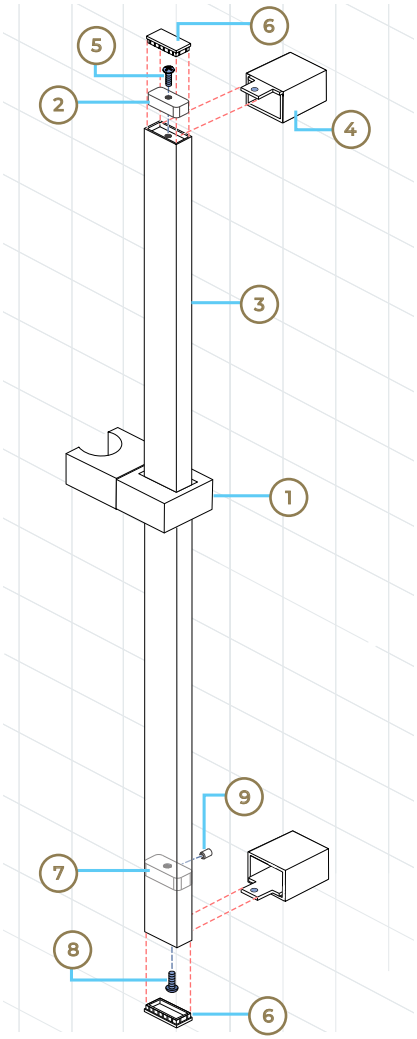

Step 6:

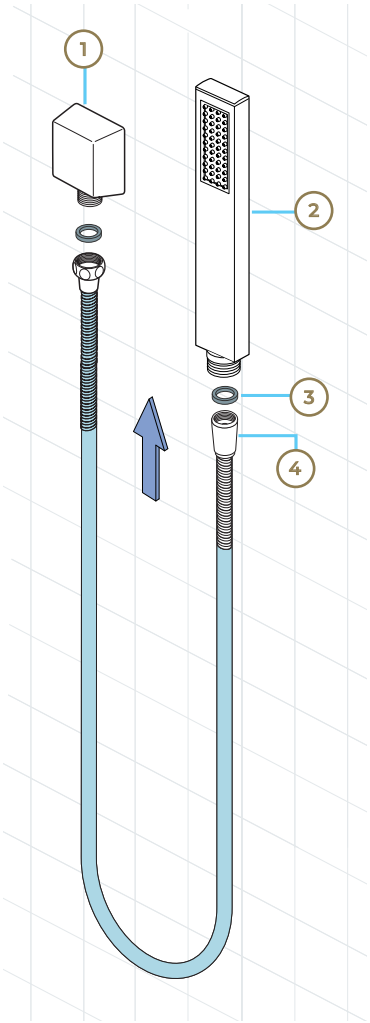

Completed

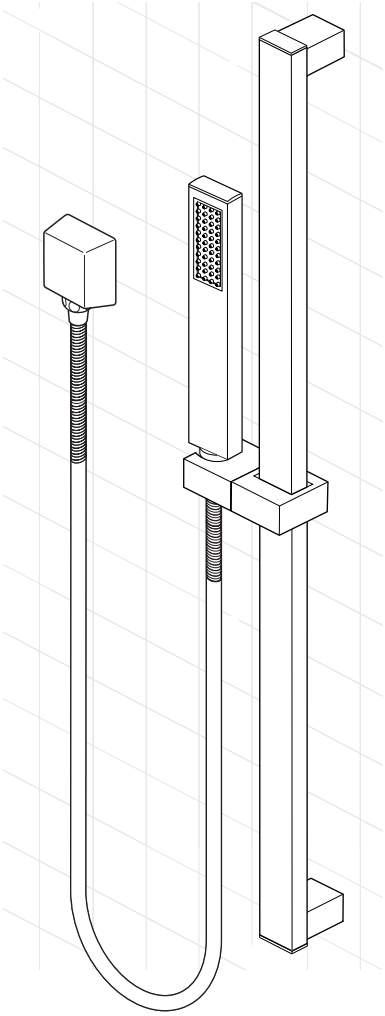

Square Body Jets Spray Installations Instruction

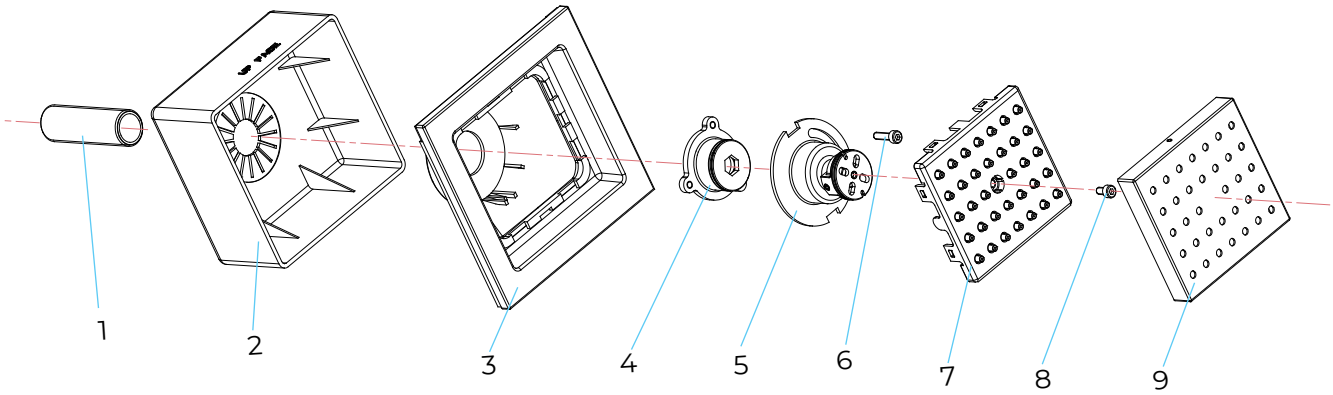

Parts : 1.Pipe, 2.Plastic box, 3.Decorative plate, 4.Connector, 5.Body, 6.Bolt #6, 7.Outlet face, 8.Bolt #8 9.Outlet face

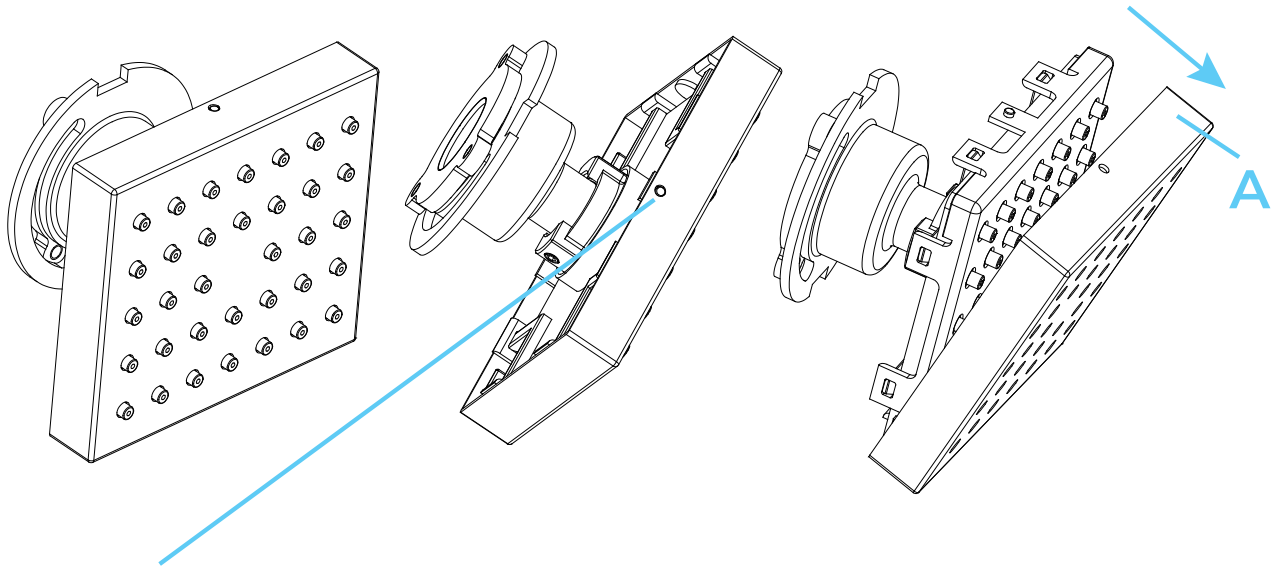

Step 1: Push the hole. Remove the decorative plate (A) out of the body

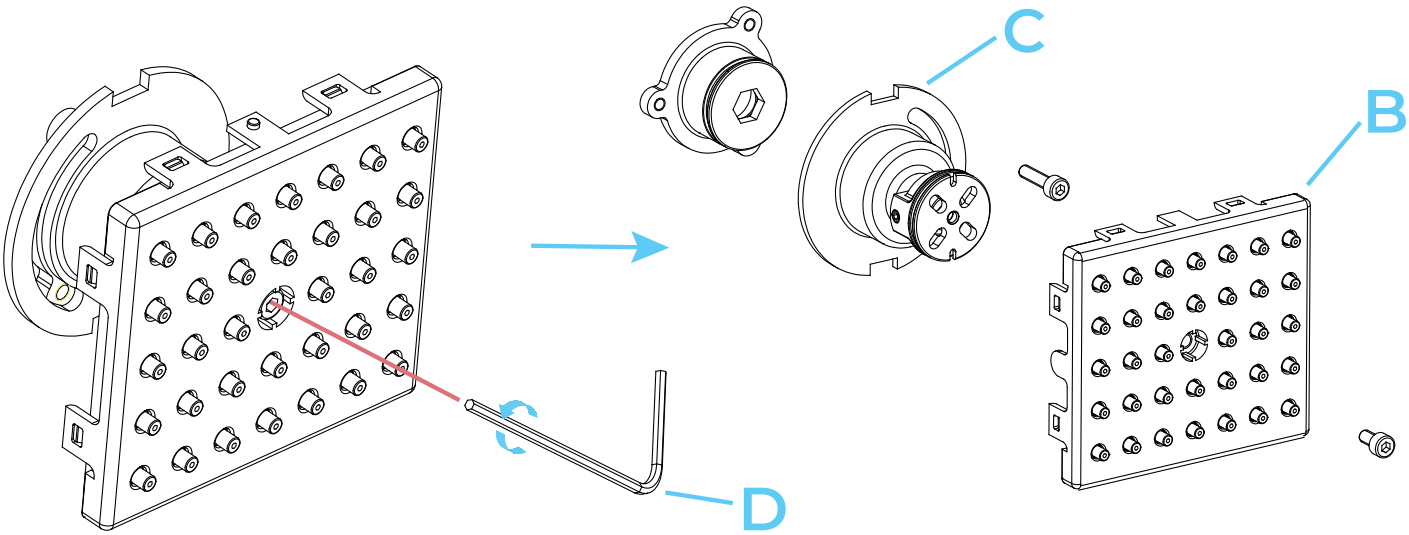

Step 2: Remove the screws from the outlet face (B) and connector body (C) with the Allen key (D).

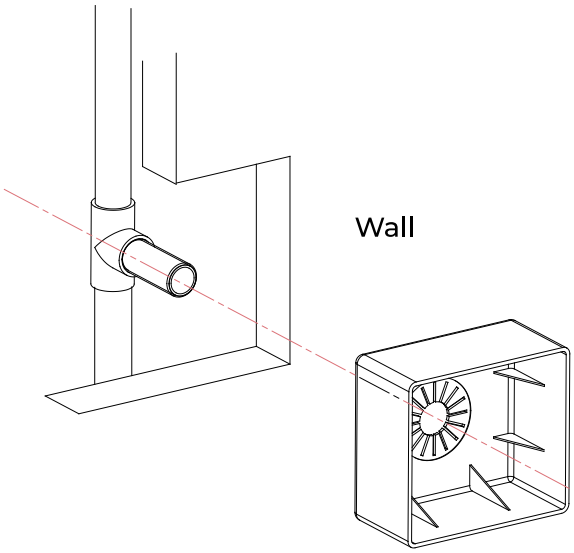

Step 3: Push the plastic box into the wall
IMPORTANT: Please make sure the UP FACE marking is in the top position

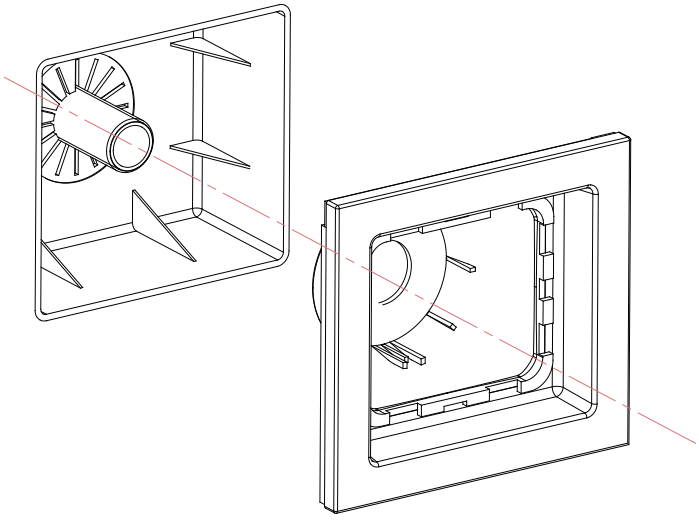

Step 4: Install the decorative plate assembly into the plastic box. Make sure the position is correct

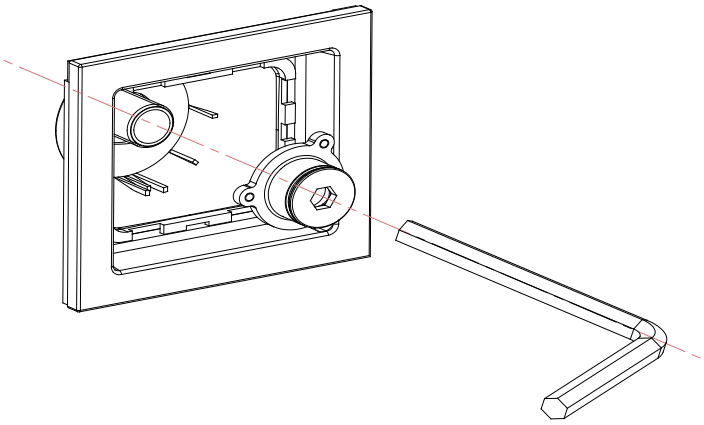

Step 5: Screw the connector into the pipe with H10 wrench

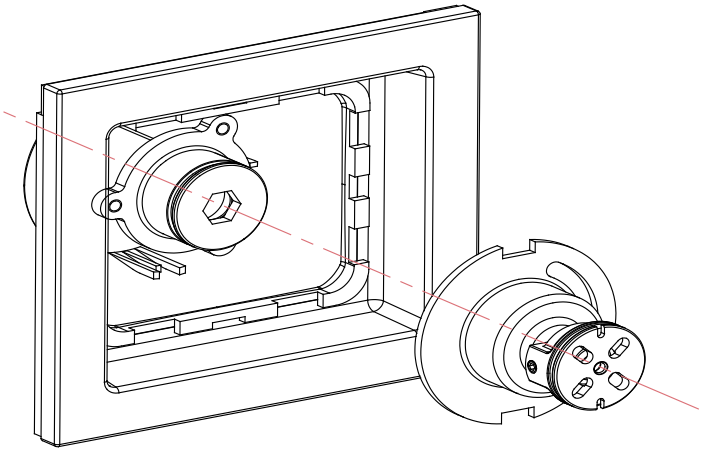

Step 6: Install the body assembly to the connector

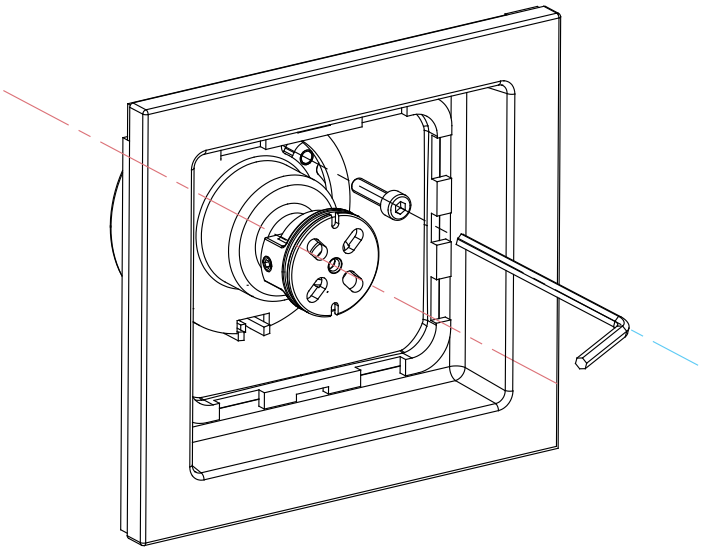

Step 7: Screw the bolt #6 into the body. Make sure the body and the connector are tight. The decorative plate should now be secure and will not move

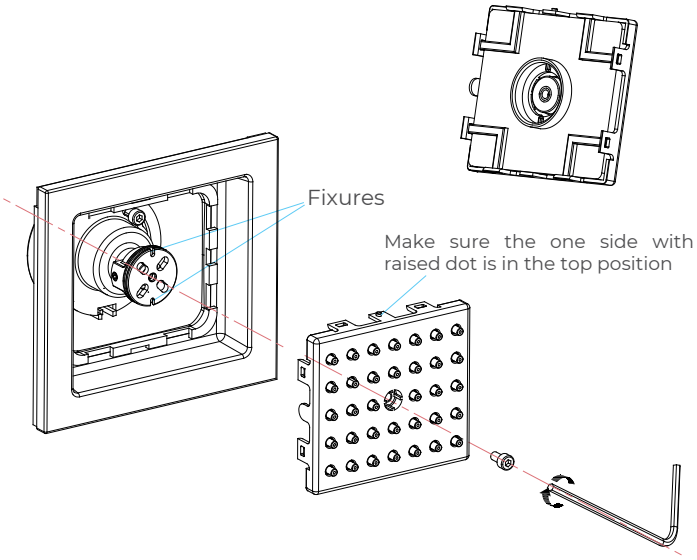

Step 8: Install the outlet face assembly to the body. Make sure the outlet face is fully seated onto the body. Screw the bolt #8 through the outlet face into the body *(Do not over tighten)*

(Make sure the hole and the raised dot are in the correct position when you push the decorative plate into the body.)

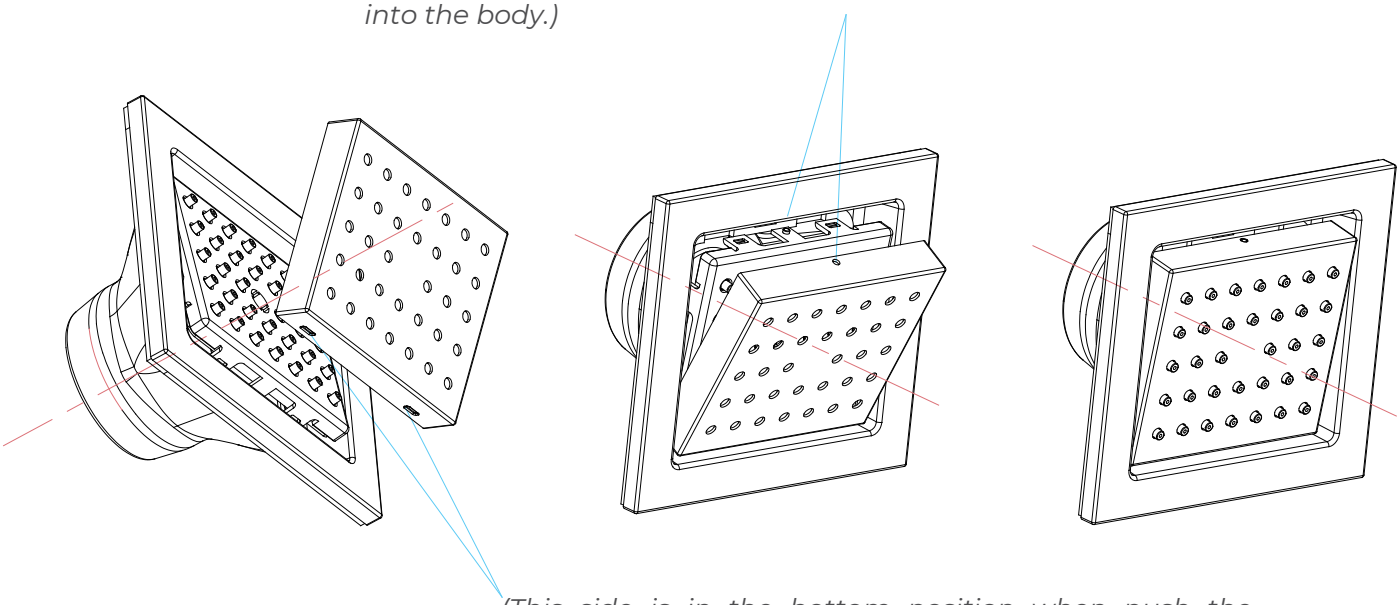

(This side is in the bottom position when push the decorative plate into the body first.)

Step 9: Screw the outlet face a little angled. Make the decorative plate have a little angle too when push it into the body. Adjust the outlet face when push the decorative plate in order to put it out of the decorative plate

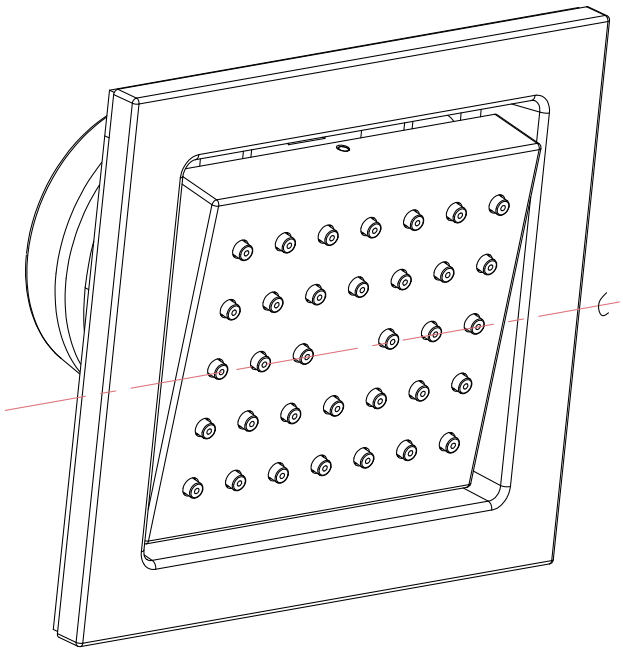

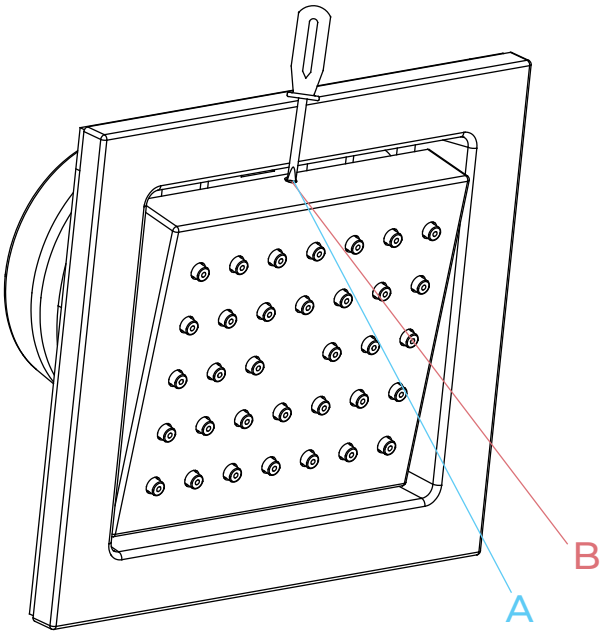

Step 10: Products can adjust to the angle positions as shown below: face when push the decorative plate in order to put it out of the decorative plate

Step 11: Do not use abrasive sponges or microfiber cloths, corrosive cleansers, solvents or acids. We recommend that you do not use any anti-lime scale products or cleaners containing vinegar and acetic acid. Chemical cleaning agents may damage the product. Clean products using only mild soap or a wet cloth

A> Protect the decorative plate coating when removing it.
B> Use screwdriver to remove

Mixer Installations Instructions

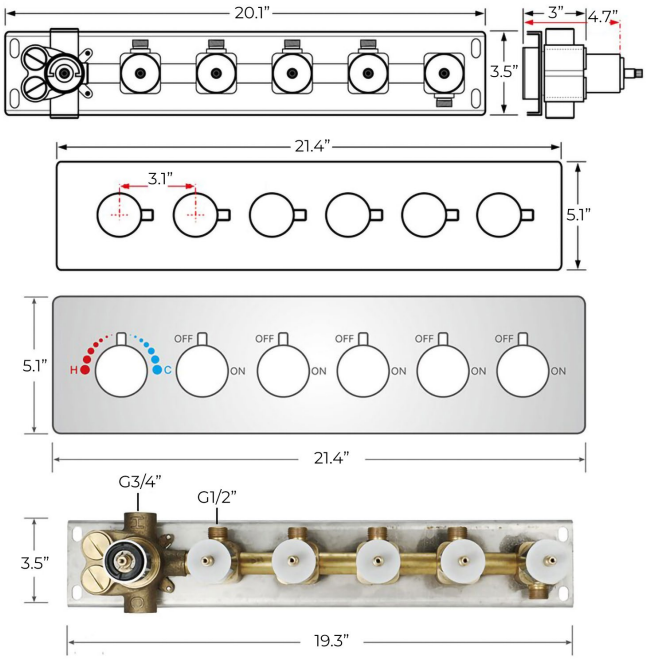

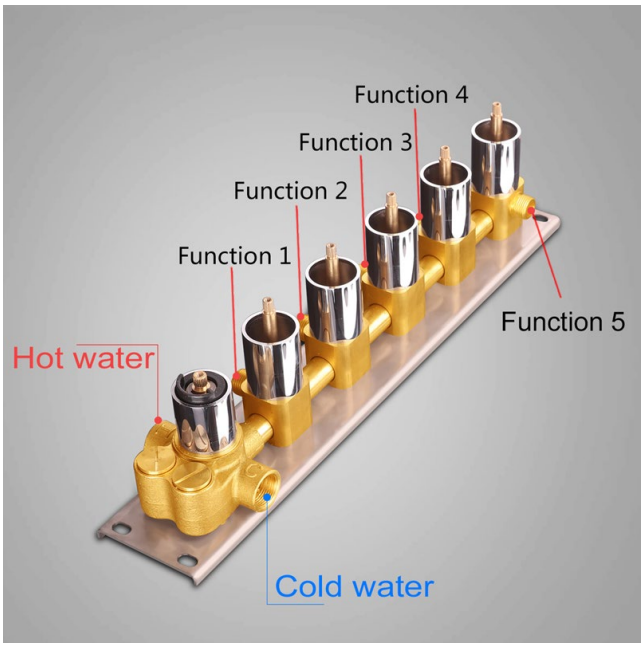

Step 1

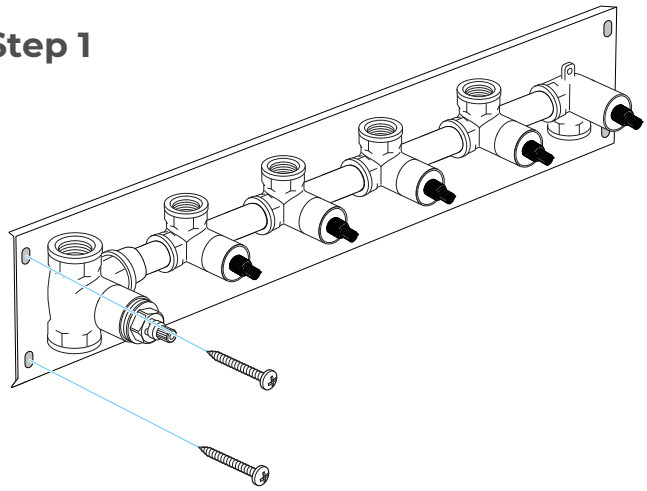

Step 2

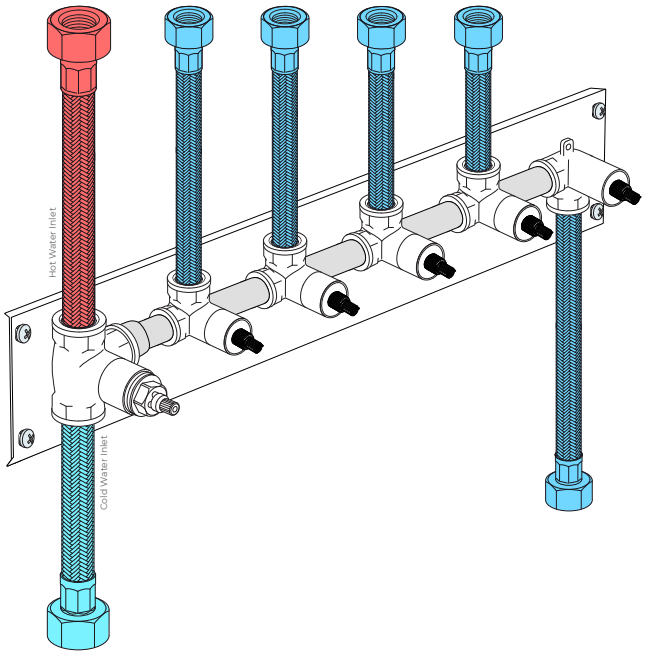

Step 3

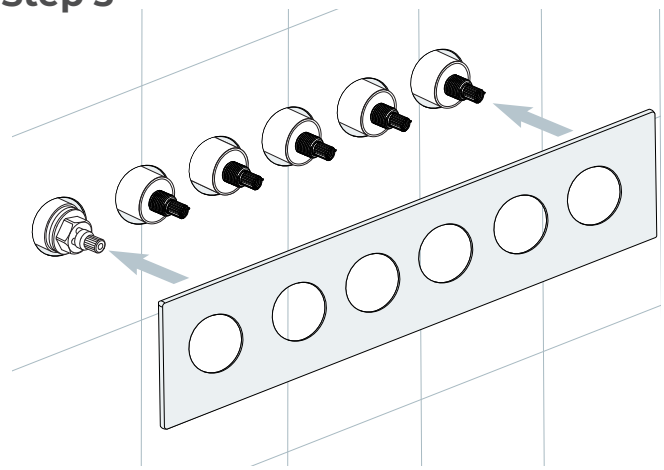

Step 4

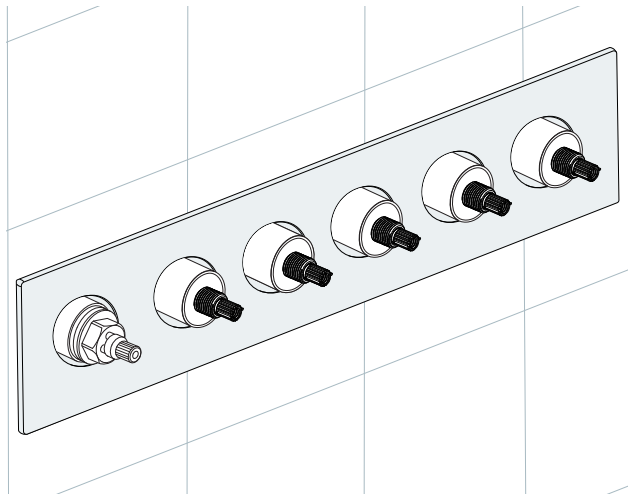

Step 5

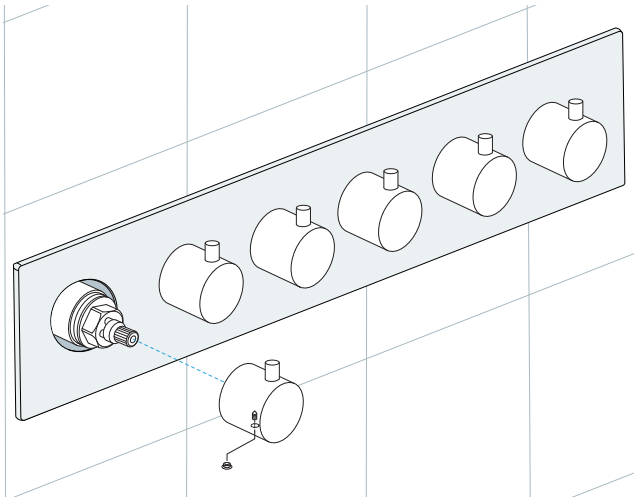

Step 6

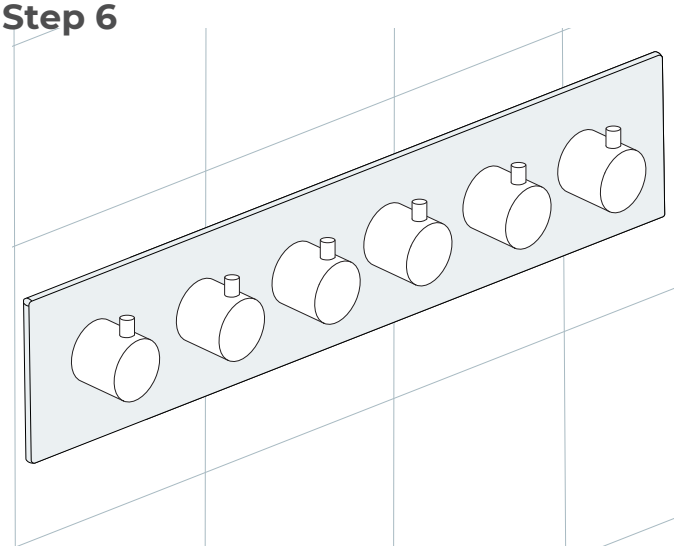

- Release handwheel levers according to the directions.
- Take apart the embed valve, panel, and handwheel.
- Dig the embed space for the pipe on the wall according to the
valve.
- Dig holes according to the position of the screws.
- Use a hammer to thwack the screws into holes.
- Fix the valve body with screws.
- Find out the expansion screw heads with washer and spring washer. Use copper sleeve wrench to lock the screw heads with the embed valve body.
- After connecting all the pipes and before sealing the wall wi
leaking problem occur when you turn on the water.
- Fix the decorative panel on the embed-ded valve body.
- Screw the handwheel arms with the handwheels

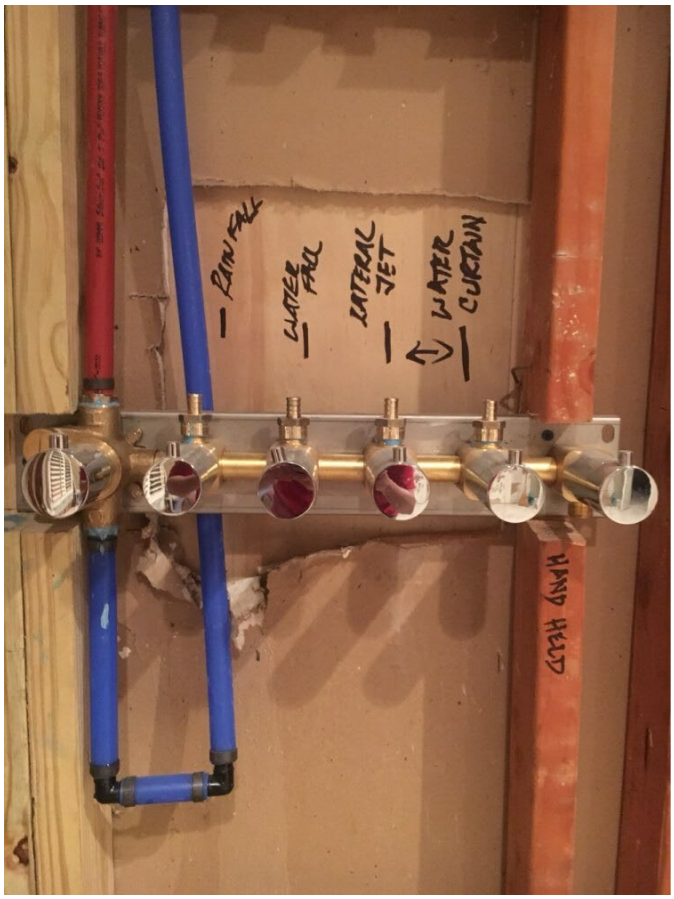

General Information

All products manufactured and supplied by Fontana are safe and comply to legislative requirements. Providing they are installed correctly and receive regular maintenance in accordance with these instructions your user experience will not be affected.

Care & Cleaning

1. The product can be cleaned with warm water, a mild soap and a clean soft cloth.

2. Clean progressively and gently.

3. It is not required to use any abrasive cleaning pads, wire wool or cloths to clean the product.

4. Avoid a vigorous cleaning action, as this could contribute to denaturing and dulling

5.Abrasive or strong cleaning products containing ammonia, bleaches, alcohol, dyes, acids (hydrochloric, formic, phosphorus, chlorine or acetic) will be not be affected.
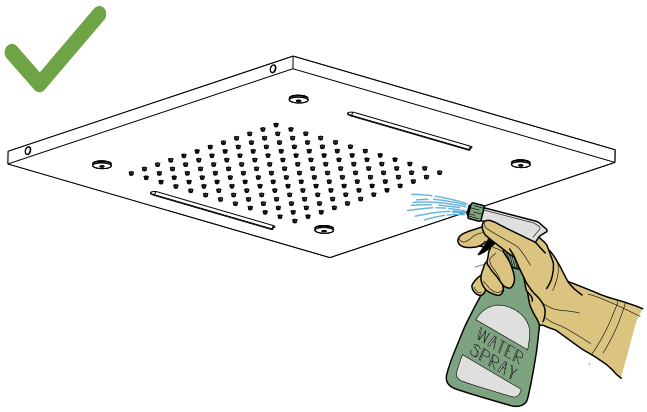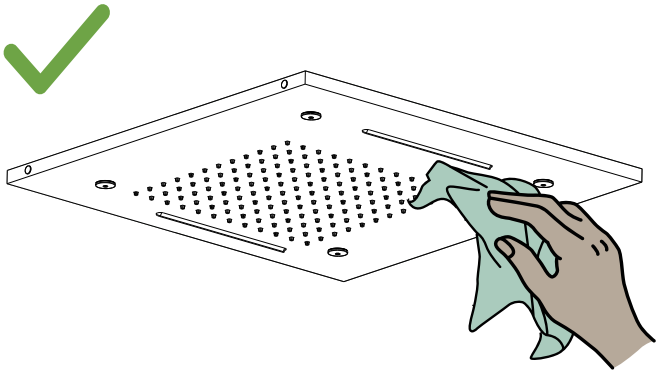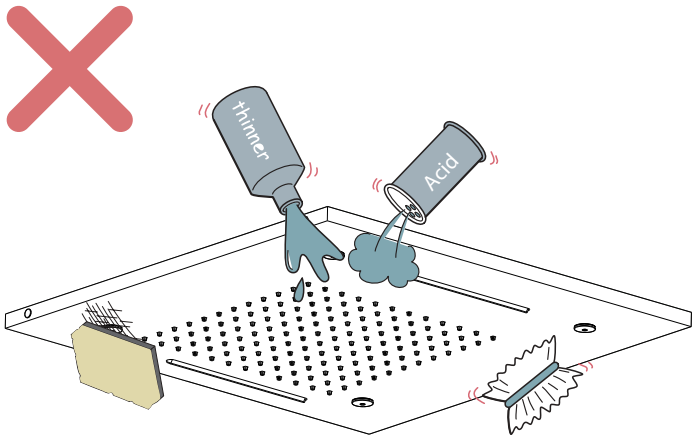
6. If using a spray cleaner, apply the cleaning agent onto a soft cloth, never directly spray onto the product as the cleaner may enter gaps and openings and cause damage. Do not allow the cleaner to remain on the product for a period of time. After cleaning, rinse thoroughly with clean water.